19-0189; Rev 1; 6/99

MAXIM

Precision, Quad, SPDT, CMOS Analog Switch

General Description

The MAX333A is a precision, quad, single-pole double-throw (SPDT) analog switch. The four independent switches operate with bipolar supplies ranging from ±4.5V to ±20V, or with a single-ended supply between +10V and +30V. The MAX333A offers low on resistance (less than 35Ω), guaranteed to match within 2Ω between channels and to remain flat over the analog signal range (Δ3Ω max). It also offers break-before-make switching (10ns typical), with turn-off times less than 145ns and turn-on times less than 175ns. The MAX333A is ideal for portable operation since quiescent current runs less than 50µA with all inputs high or low.

This monolithic, quad switch is fabricated with Maxim's new improved silicon-gate process. Design improvements guarantee extremely low charge injection (10pC), low power consumption (3.75mW), and electrostatic discharge (ESD) greater than 2000V.

Logic inputs are TTL and CMOS compatible and guaranteed over a +0.8V to +2.4V range—regardless of supply voltage. Logic inputs and switched analog signals can range anywhere between the supply voltages without damage.

Applications

Test Equipment
Communications Systems
PBX, PABX
Heads-Up Displays
Portable Instruments

Features

- **Upgraded Replacement for a DG211/DG212 Pair or Two DG403s**
- **Low On Resistance < 17Ω Typical (35Ω Max)**
- **Guaranteed Matched On Resistance Between Channels < 2Ω**
- **Guaranteed Flat On Resistance over Analog Signal Range Δ3Ω Max**
- **Guaranteed Charge Injection < 10pC**
- **Guaranteed Off-Channel Leakage < 6nA at +85°C**
- **ESD Guaranteed > 2000V per Method 3015.7**
- **Single-Supply Operation (+10V to +30V) Bipolar-Supply Operation (±4.5V to ±20V)**
- **TTL-/CMOS-Logic Compatibility**
- **Rail-to-Rail Analog Signal Handling Capability**

Ordering Information

PART	TEMP. RANGE	PIN-PACKAGE
MAX333ACPP	0°C to +70°C	20 Plastic DIP
MAX333ACWP	0°C to +70°C	20 Wide SO
MAX333ACUP	0°C to +70°C	20 TSSOP
MAX333AC/D	0°C to +70°C	Dice*
MAX333AEPP	-40°C to +85°C	20 Plastic DIP
MAX333AEWP	-40°C to +85°C	20 Wide SO
MAX333AEUP	-40°C to +85°C	20 TSSOP
MAX333AMJP	-55°C to +125°C	20 CERDIP

* *Contact factory for dice specifications.*

Pin Configuration

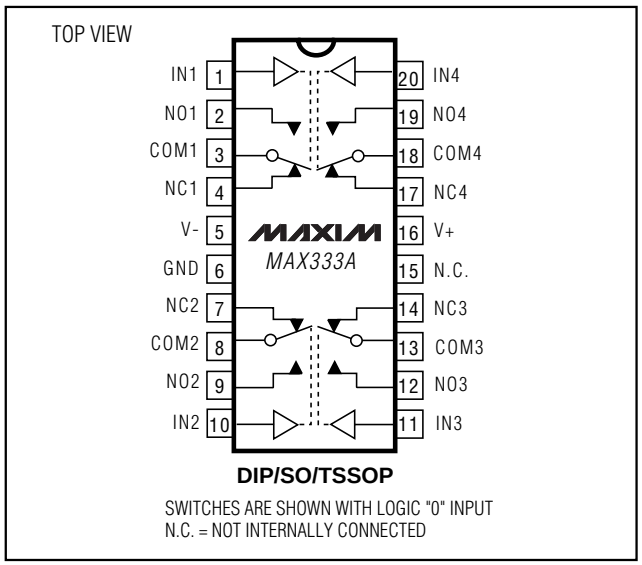

DIP/SO/TSSOP

SWITCHES ARE SHOWN WITH LOGIC "0" INPUT
N.C. = NOT INTERNALLY CONNECTED

Typical Operating Circuit

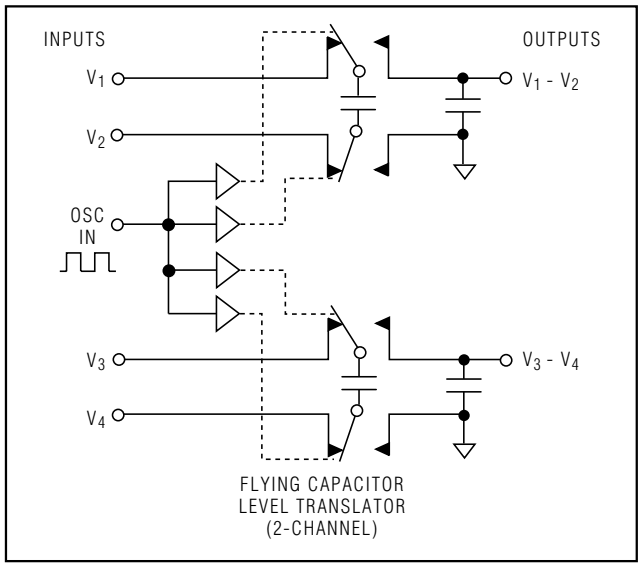

FLYING CAPACITOR
LEVEL TRANSLATOR
(2-CHANNEL)

For free samples & the latest literature: http://www.maxim-ic.com, or phone 1-800-998-8800.
For small orders, phone 1-800-835-8769.

Precision, Quad, SPDT, CMOS Analog Switch

ABSOLUTE MAXIMUM RATINGS

V+ to V- 44V
V_{IN}, V_{COM}, V_{NO}, V_{NC} .....V- to V+
(V_{NO} - V_{NC}) 32V
V+ to Ground.....30V
V- to Ground.....-30V
Current, Any Terminal Except V_{COM}, V_{NO}, or V_{NC}.....30mA
Continuous Current, V_{COM}, V_{NO}, or V_{NC}.....20mA
Peak Current, V_{COM}, V_{NO}, or V_{NC}
(Pulsed at 1ms, 10% duty cycle max) 70mA
ESD 2000V

Continuous Power Dissipation (T_A = +70°C) (Note 1)
Plastic DIP (derate above +70°C by 11.11mW/°C) 889mW
SO (derate above +70°C by 10.00mW/°C).....800mW
CERDIP (derate above +70°C by 11.11mW/°C).....889mW
TSSOP (derate above +70°C by 7mW/°C) 559mW
Operating Temperature Ranges:
MAX333AC_ _ .....0°C to +70°C
MAX333AE_ _ .....-40°C to +85°C
MAX333AMJP.....-55°C to +125°C
Storage Temperature Range .....-65°C to +150°C
Lead Temperature (soldering, 10sec) .....+300°C

Note 1: Device mounted with all leads soldered to PC board.

Stresses beyond those listed under "Absolute Maximum Ratings" may cause permanent damage to the device. These are stress ratings only, and functional operation of the device at these or any other conditions beyond those indicated in the operational sections of the specifications is not implied. Exposure to absolute maximum rating conditions for extended periods may affect device reliability.

ELECTRICAL CHARACTERISTICS—Dual Supplies

(GND = 0V, V+ = +15V, V- = -15V, T_A = +25°C, unless otherwise noted.)

PARAMETER	SYMBOL	CONDITIONS		MIN	TYP (Notes 2, 3)	MAX	UNITS
POWER REQUIREMENTS							
Positive Supply Current	I+	V_{IN} = 0V/5V,V+ = 16.5V, V- = -16.5V			0.05	0.25	mA
Supply Voltage Range	V+/V-	Dual supply, |V+| = |V-|		±4.5V		±20	V
	V+	Single supply, V- = GND		10		30	
Negative Supply Current	I-	V_{IN} = 0V/5V,V+ = 16.5V, V- = -16.5V			0.01	1	µA
LOGIC INPUT							
Input Voltage Low	V_{IL}			V-		0.8	V
Input Voltage High	V_{IH}			2.4		V+	V
Input Current	I_{IN}	V_{IN} = V-, V+		-1.0	0.0001	1.0	µA
SWITCH							
Analog Signal Range	V_{COM}, V_{NO}, V_{NC}			V-		V+	V
On Circuit Resistance	R_{ON}	V_{COM} = +10V, $I_{(NC\ or\ NO)}$ = 1mA; V_{COM} = -10V, $I_{(NC\ or\ NO)}$ = 1mA	M		20	35	Ω
			C, E			45	
On Resistance Match Between Channels (Note 4)	R_{ON}	$I_{(NC\ or\ NO)}$ = -10mA, V_D = 10V or -10V, V+ =15V, V- = -15V	T_A = +25°C			2	Ω
			T_A = T_{MIN} to T_{MAX}			4	
On Resistance Flatness (Note 4)	R_{ON}	$I_{(NC\ or\ NO)}$ = -10mA, V_D = 5V or -5V, V+ =15V, V- = -15V	T_A = +25°C			3	Ω
			T_A = T_{MIN} to T_{MAX}			5	
On Circuit Leakage Current	I_{COM}	V_{COM} = ±15.5V, V_{NC} or V_{NO} = ∓15.5V, V+ = 16.5V, V- = -16.5V	M	-0.75		0.75	nA
			C, E	-1.00	0.20	1.00	
Off Circuit Leakage Current	I_{NC} or I_{NO}	V_{COM} = ±15.5V V_{NC} or V_{NO} = ∓15.5V, V+ = 16.5V, V- = -16.5V	M	-0.25	0.01	0.25	nA
			C, E	-0.50	0.02	0.05	
DYNAMIC							
Turn-Off Time	t_{OFF}	Figure 1				145	ns
Turn-On Time	t_{ON}					175	ns
Break-Before-Make Time	t_{OPEN}			10			ns
Off Capacitance	C_{OFF}				5		pF
On Capacitance	C_{ON}				5		pF
Charge Injection	Q	C_L = 10nF, V_{GEN} = 0V, R_{GEN} = 0Ω, Figure 6	T_A = +25°C		2	10	pC
Off Isolation	OIRR	f = 1MHz, RL = 75Ω, V_{COM} = $2.3V_{RMS}$			72		dB
Crosstalk	CCRR				78		dB

ELECTRICAL CHARACTERISTICS–DUAL SUPPLIES (continued)

(GND = 0V, V+ = +15V, V- = -15V, T_A = T_{MIN} to T_{MAX}, unless otherwise noted.)

PARAMETER	SYMBOL	CONDITIONS		MIN	TYP	MAX (Notes 2, 3)	UNITS
LOGIC INPUT							
Input Voltage Low	V_{IL}			V-		0.8	V
Input Voltage High	V_{IH}			2.4		V+	V
Input Current	I_{IN}	V_{IN} = V-, V+		-1.0	0.0001	1.0	µA
SWITCH							
Analog Signal Range	V_{COM}			V-		V+	V
On Circuit Resistance	R_{ON}	V_{COM} = 10V, $I_{(NC \text{ or } NO)}$ = 1mA; V_{COM} = -10V, $I_{(NC \text{ or } NO}$ = 1mA	C, E			45	Ω
			M			45	
On Circuit Leakage Current	I_{COM}	V_{COM} = ±15V, V_{NC} or V_{NO} = -15V, V+ = 16.5V, V- = -16.5V	C, E	-10		10	nA
			M	-60		60	
On Circuit Leakage Current	I_{NC} or I_{NO}	V_{COM} = ±15V, V_{NC} or V_{NO} = -15V, V+ = 16.5V, V- = -16.5V	C, E	-6		6	nA
			M				

ELECTRICAL CHARACTERISTICS—Single Supply

(GND = 0V, V+ = +12V, V- = 0V, T_A = +25°C, unless otherwise noted.)

PARAMETER	SYMBOL	CONDITIONS	MIN	TYP	MAX (Notes 2, 3)	UNITS
SUPPLY						
Supply Voltage Range	V+	Single supply, V- = GND	10		30	V
Positive Supply Current	I+				0.25	mA
INPUT						
Input Voltage Low	V_{INLO}		0		0.8	V
Input Voltage High	V_{INHI}		2.4		V+	V
Input Current	I_{IN}	V_{IN} = V+, 0V			1	µA
SWITCH						
Analog Signal Range	V_{COM}, V_{NO}, V_{NC}		V-		V+	V
On Circuit Resistance	r_{ON}	V_{COM} = 10V, $I_{(NC \text{ or } NO)}$ = 1mA, V_{COM} = 1V, $I_{(NC \text{ or } NO)}$ = 1mA		35	75	Ω
On Circuit Leakage Current	I_{COM}	V_{COM} = 11V, V_{NC} or V_{NO} = 0V V_{COM} = 1V, V_{NC} or V_{NO} = V+			0.75	nA
Off Circuit Leakage Current	I_{NC} or I_{NO}	V_{COM} = 11V V_{NC} or V_{NO} = 1V			0.25	nA
DYNAMIC						
Turn-Off Time	t_{OFF}	Figure 1		45		ns
Turn-On Time	t_{ON}			90		ns
Break-Before-Make Time	t_{OPEN}		5	10		ns
Off Isolation	OIRR	f = 1MHz, R_L = 75Ω, V_{COM} = 2.3V_{RMS}		70		dB
Crosstalk	CCRR			72		dB

Note 2: The algebraic convention, whereby the most negative value is a minimum and the most positive is a maximum, is used in this data sheet.

Note 3: Typical values are for design aid only, not guaranteed or subject to production testing.

Note 4: On resistance match between channels and flatness are guaranteed only with bipolar-supply operation.

Precision, Quad, SPDT, CMOS Analog Switch

Typical Operating Characteristics

(T_A = +25°C, unless otherwise noted).

ON RESISTANCE vs. V_{COM} AND POWER SUPPLY VOLTAGE

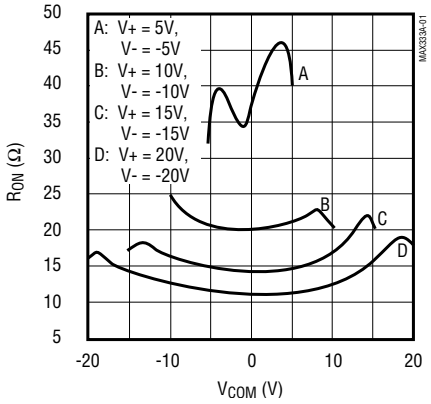

ON RESISTANCE vs. V_{COM} AND TEMPERATURE

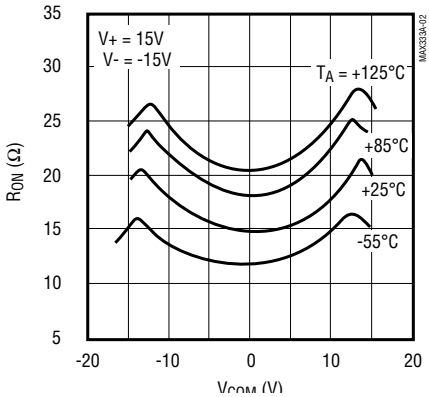

ON RESISTANCE vs. V_{COM} AND TEMPERATURE

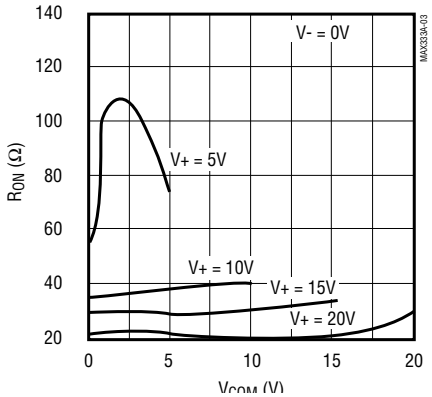

ON RESISTANCE vs. V_{COM} AND SINGLE SUPPLY

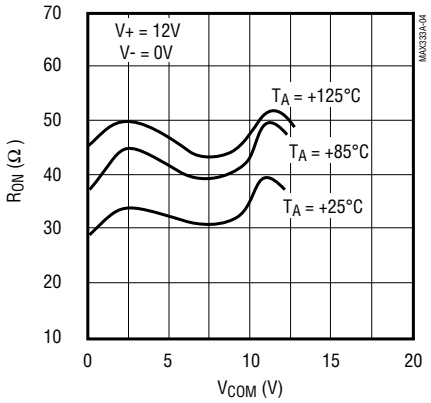

OFF LEAKAGE CURRENTS vs. TEMPERATURE

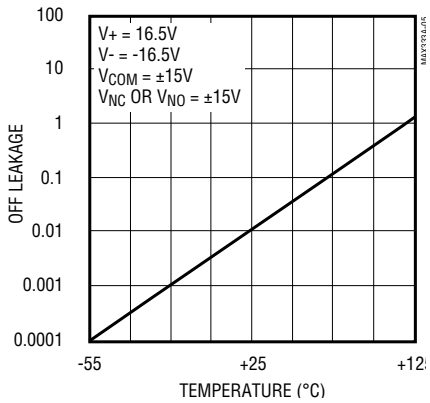

ON LEAKAGE CURRENTS vs. TEMPERATURE

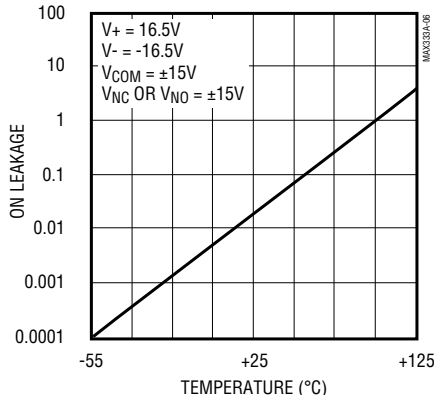

CHARGE INJECTION vs. V_{COM}

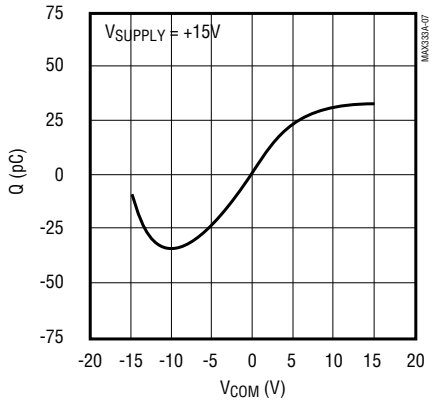

SUPPLY CURRENT vs. TEMPERATURE

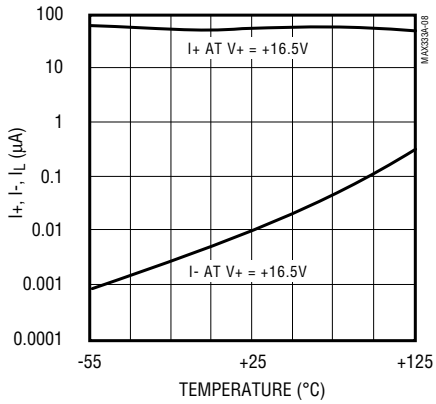

Pin Description

PIN	NAME	FUNCTION
1, 10, 11, 20	IN1-IN4	Logic-Level Inputs
2, 9, 12, 19	NO1-NO4	Normally Open Switches
3, 8, 13, 18	COM1-COM4	Common Switch Poles
4, 7, 14, 17	NC1-NC4	Normally Closed Switches
5	V-	Negative Power Supply
6	GND	Ground
15	N.C.	Not Internally Connected
16	V+	Positive Power Supply

Applications Information

Operation with Supply Voltages Other than ±15V

The main limitation of supply voltages other than ±15V is a reduction in the analog signal range. The MAX333A operates with ±5V to ±20V bipolar supplies. The *Typical Operating Characteristics* and graphs show typical on resistance for ±15V, ±10V, ±5 supplies. Switching times increase by a factor of two or more for ±5V operation. The MAX333A can operate from +10V to +24V unipolar supplies. It can be powered from a single +10V to +24V supply, as well as from unbalanced supplies such as +24V and -5V. Connect V- to 0V when operating with a single supply.

Overvoltage Protection

Proper power-supply sequencing is recommended for all CMOS devices. It is important not to exceed the absolute maximum ratings because stresses beyond the listed ratings may cause permanent damage to the devices. Always sequence V+ on first, followed by VL, V-, and logic inputs. If power-supply sequencing is not possible, add two small signal diodes in series with the supply pins (Figure 1). Adding the diodes reduces the analog signal range to 1V below V+ and 1V below V-, but low switch resistance and low leakage characteristics are unaffected.

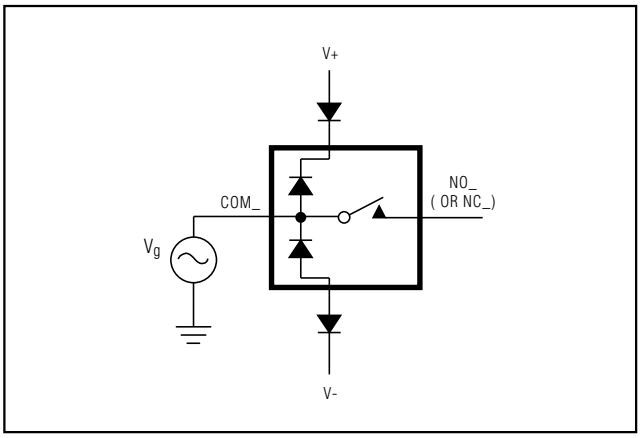

Figure 1. Overvoltage Protection Using Blocking Diodes

Test Circuits/Timing Diagrams

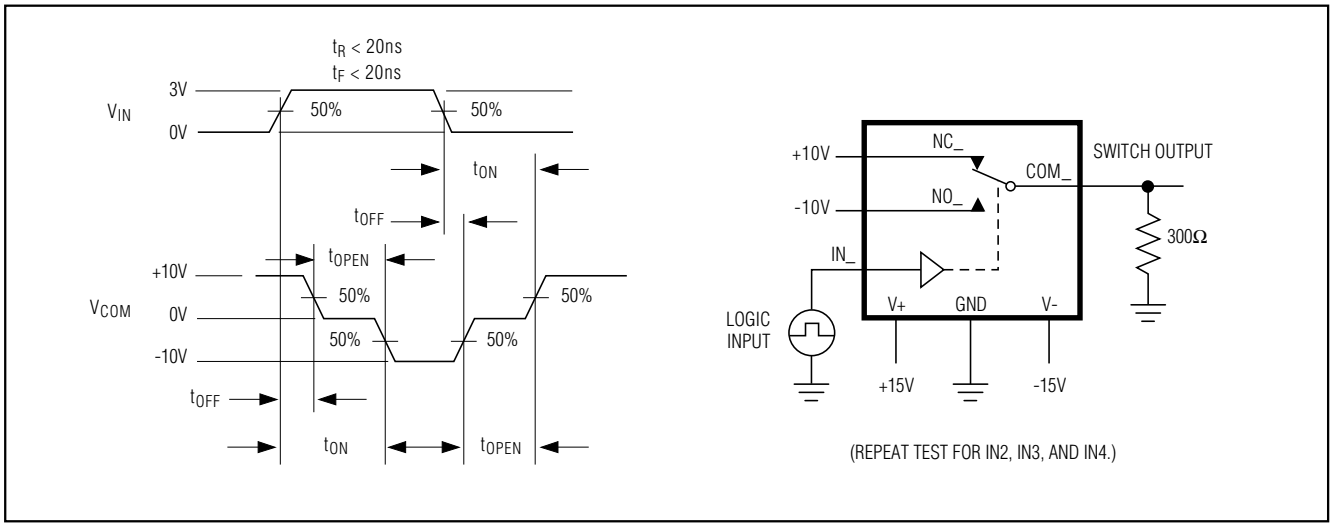

Figure 2. Switching-Time Test Circuit

Precision, Quad, SPDT, CMOS Analog Switch

Test Circuits/Timing Diagrams

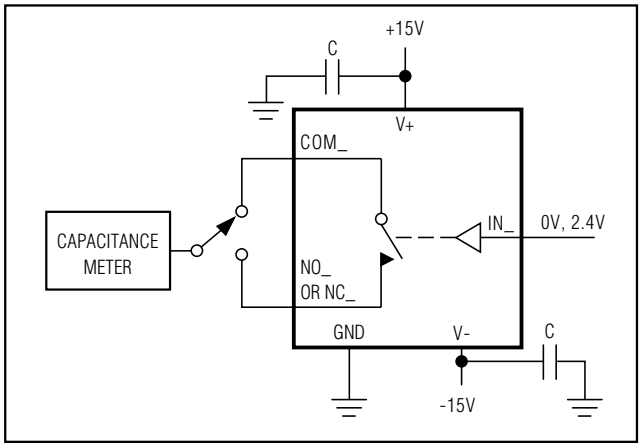

Figure 3. Channel-Off Capacitance

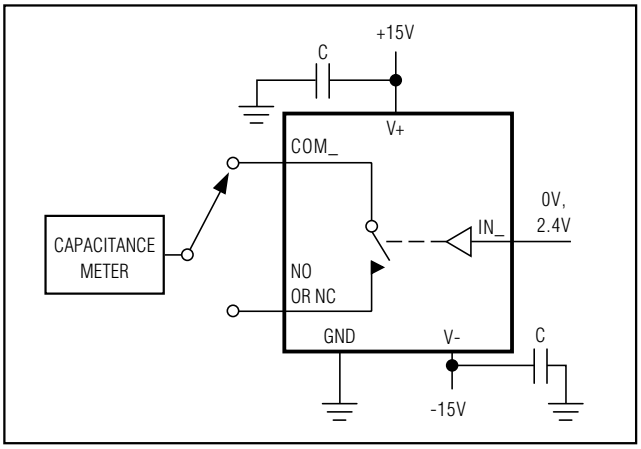

Figure 4. Channel-On Capacitance

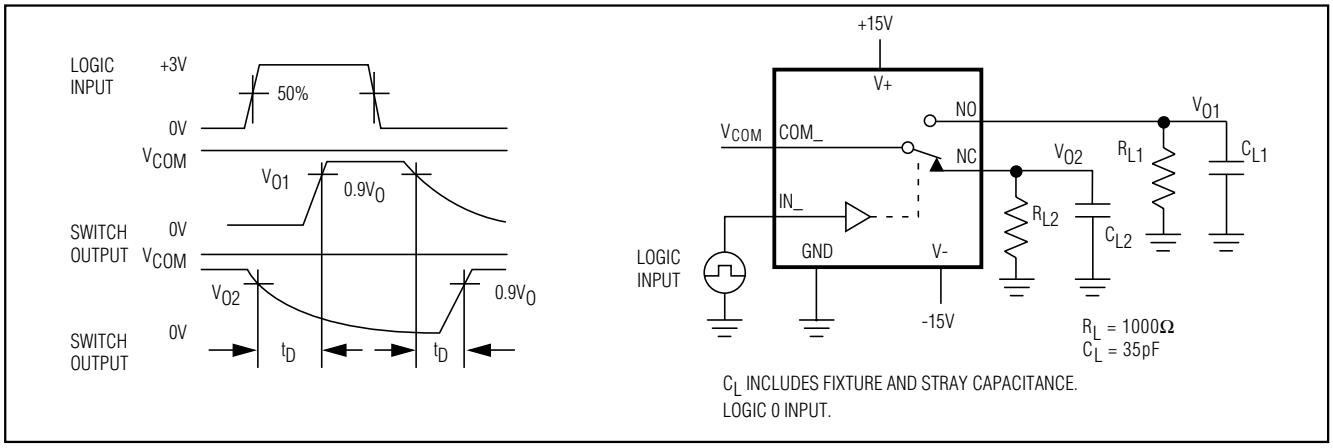

Figure 5. Break-Before-Make

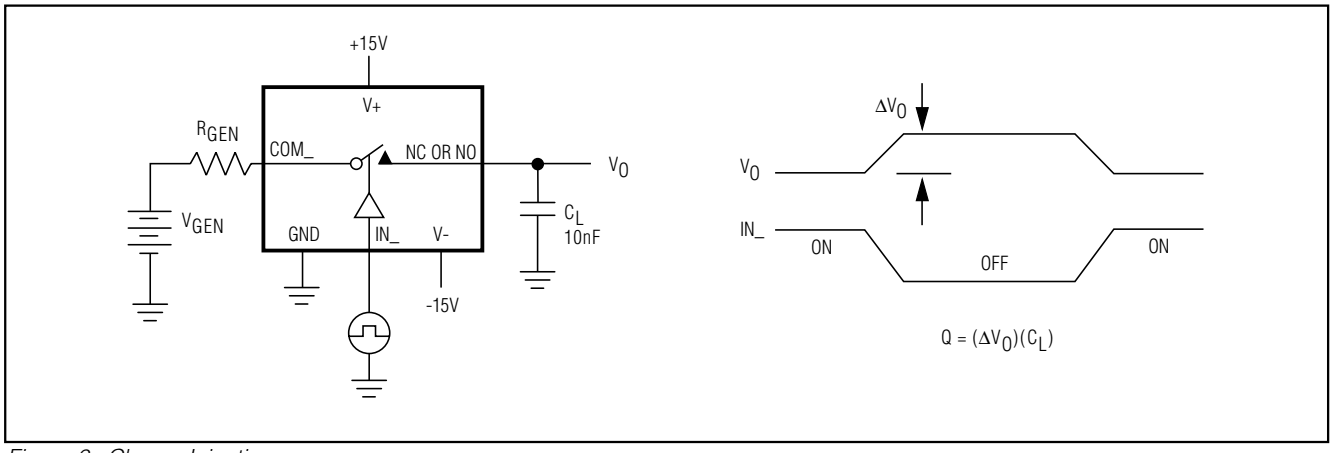

Figure 6. Charge Injection

Test Circuits/Timing Diagrams (continued)

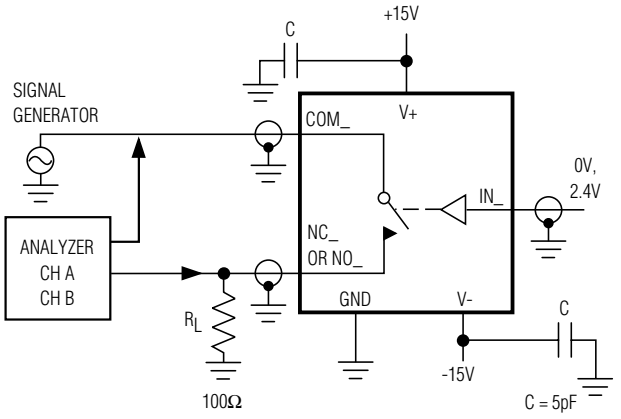

FREQUENCY TESTED	SIGNAL GENERATOR	ANALYZER
1 MHz	AUTOMATIC SYNTHESIZER	TRACKING SPECTRUM ANALYZER

$$\text{OFF ISOLATION} = 20\text{LOG}\ \frac{V_{COM}}{V_{NC\ OR\ V_{NO}}}$$

Figure 7. Off-Isolation

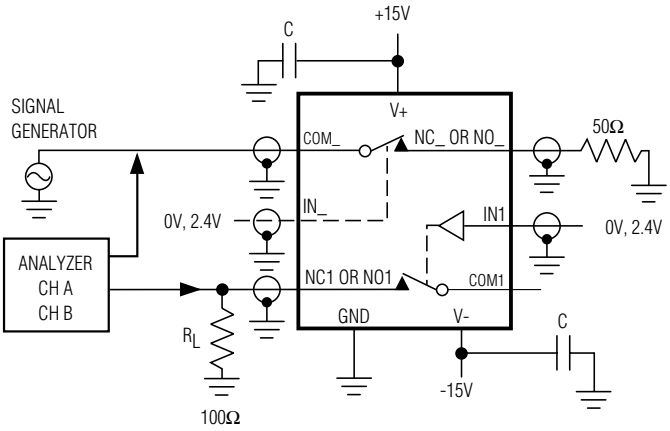

FREQUENCY TESTED	SIGNAL GENERATOR	ANALYZER
1 MHz	AUTOMATIC SYNTHESIZER	TRACKING SPECTRUM ANALYZER

REPEAT TESTS FOR OTHER CHANNELS

Figure 8. Crosstalk

Precision, Quad, SPDT, CMOS Analog Switch

Chip Topography

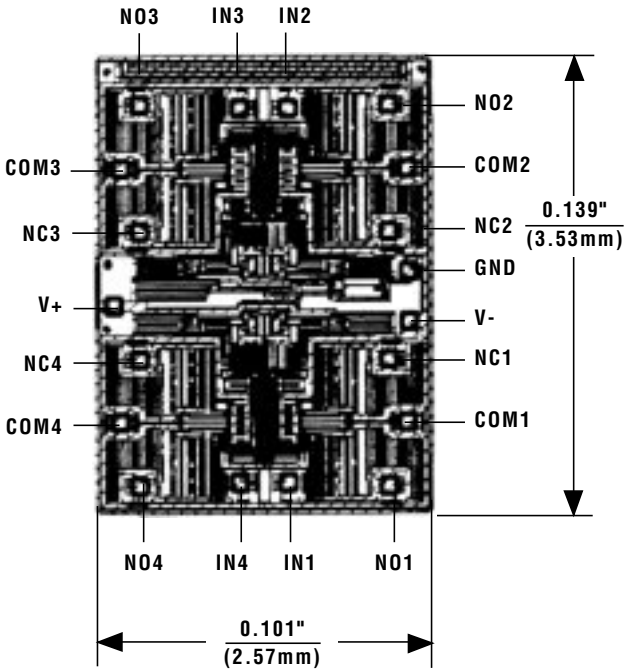

TRANSISTOR COUNT: 145;
SUBSTRATE CONNECTED TO V+.

Maxim cannot assume responsibility for use of any circuitry other than circuitry entirely embodied in a Maxim product. No circuit patent licenses are implied. Maxim reserves the right to change the circuitry and specifications without notice at any time.

© 1999 Maxim Integrated Products Printed USA MAXIM is a registered trademark of Maxim Integrated Products.